avelis
appliances

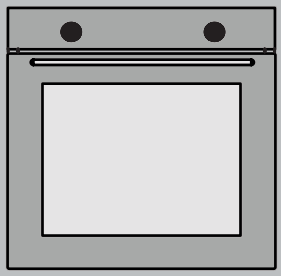

Built-in Oven

User Manual

AG6069BLK

EN

Dear Our Precious Customer,

Thank you for choosing a product. We would like you to be satisfied with our product, which has been produced in our highly qualified, technological and modern facilities.
You can use your oven with pleasure and confidence for many years by performing required maintenance and showing necessary care. Read the whole manual. Retain the manual during use of the product. If you hand the product over to someone else, give them the manual as well.

⚠ This Operating Manual is prepared for multiple models. Some of the features mentioned may not be available in your product.

Symbol	Meaning
	Important Information
	Warning - Caution
	Risk of Electric Shock
	Risk of Fire

CONTENTS

1. Important Safety Warnings **4**
General Warnings 4
Electrical Hazard 5
Risk of Injury 6
Purpose of Use 6

2.Environmental Protection **7**
Energy Saving 7
Compliance With WEEE Regulation and Disposal of The Product 8
Technical Specifications 9

3.Device Installation **10**
Important Warnings 15
Future Carrying Procedures 16
Connecting The Gas Hose 17

4.Become Familiar with the Appliance **21**
General Overview 21
Control Panel 22
Heating Types And Functions 23

5.Use of the Oven **24**
First use 25
Clock Setting 25
Use of the Gas Oven 27
Use of the Grill 27
Using the Digital Timer 28
Alarm Setup 30

6.Accessories **32**
Use of the Accessories 33

7. Roast Chicken **32**

8.Cooking Recommendations **36**

9.Maintenance and Cleaning **37**
Removing and Attaching the Oven Door 38
Removing and Attaching the Glasses 39
Removing and Attaching the Wire Racks 40
Replacing the Oven Lamp 41

10.Troubleshooting **41**

1. Important Safety Warnings

Read the manual carefully before installation and use of the appliance. The appliance shall not be covered under warranty in case of an incorrect installation or use performed by a person other than a specialist.

⚠ General Warnings

- Follow the safety related instructions.
- The manufacturer is not responsible for personal injuries or property damage caused by false or improper use of the device.
- Also read other documents that are provided together with the appliance.
- The user manual may be convenient for more than one model.
- Keep it in an easily accessible place for future use.
- Disconnect all the energy connections before installation, maintenance and repair operations.
- If the appliance is damaged, do not operate it.
- If there is any protective gelatin on the panel or cover of your device, please remove it.
- Keep the children under 8 years old and the pets away during and after use of the appliance.
- It is dangerous for the children under 8 years old to touch the appliance without an adult supervision and to use it on their own.
- Keep the packaging materials out of reach of the children, dispose them in a place where they cannot reach.
- Do not bring damp package into contact with the mouth. Keep it out of reach of the children.
- The appliance should not be maintained and cleaned as long as the children are not under the supervision of the adults.
- The appliance is only intended for cooking. Do not use the appliance for purposes such as heating the room.
- While the oven is hot, tray and accessories may become hot; use oven gloves or a similar apparatus when you place and remove them.
- Do not use steam cleaner for cleaning the appliance.
- Keep the surrounding area of all the compartments, where there is an air circulation, open.
- If you would use an oily baking paper, do not bring the paper into contact with the base of the oven in any way.
- Do not prepare food with highly alcoholic drinks. Alcohol evaporates at a high temperature, it may catch and cause fire in case of contact with hot surfaces.
- Check whether the appliance is turned off or not after use.
- Keep the cooking duration under control.

- Do not attempt to light the oven or burner during a power outage.

- *When the device needs to be removed for cleaning or service;*

-Turn off the gas from the main supply.
-Disconnect the power supply.
-Disconnect the gas line to the inlet pipe.
-Carefully lift the device from the cabinet space. Get support from authorized people to install it back.

- All rooms require an openable window or equivalent ventilation. Combustion air is taken from the room air and exhaust gases are supplied directly to the room. Good ventilation is essential for the safe operation of your device.
- It should have a ventilation opening of 175 cm². This opening can be provided in the form of a grille, doorway, etc.
  If there is a ventilation opening lower than this value, the product cannot be used. If your gas oven is in the same room, this value should be higher.

⚠ Electrical Hazard

⚠ There is a risk of electrocution.

- The appliance should be repaired by an authorized service if it is damaged.
- In case of any damage, turn off the appliance, cut off the electricity.
- Due to the risk of electric shock, do not wash the appliance by spraying or pouring water on it.
- If the lamp would be replaced, disconnect the appliance from the electrical outlet in order to avoid electric shock before the replacement.
- Our company is not responsible of any damage that would arise for the reason that the appliance is used without connecting it in accordance with local regulations.
- Do not ever touch the plug with wet hands.
- In order to disconnect the appliance from the electrical outlet, plug it out by holding the plug, not the cable.
- While the appliance operates, its rear surface also gets warm. The electrical connections should not come into contact with the rear surface.
- Unplug the appliance during operations such as cleaning, repair and maintenance.
- Do not dislodge the resistor during cleaning.
- Do not pass the connection cables over the hot surface. If the cables melt, they may cause a short circuit or a fire.

⚠ Do not try to extinguish the fire with water.

- Disconnect the appliance from the electrical outlet and try to cover the fire with an instrument such as a fire blanket in order to prevent the fire from coming into contact with the air.
- Your product is equipped with safety devices which need electrical connection for operation. Never unplug your appliance of turn off the power using an external switch.

Risk of Injury

- If there is a crack on the oven door glass or it is exposed to an impact, the glass may break and splatter.
- In order to clean the oven door glass, do not use harsh and abrasive cleaners or metal scrapers.
- Do not touch the heating/power elements.

- The hinges of the appliance door may jam the door during movement. Do not hold the section which contains hinges.
- Never leave combustible materials or oxidizers in the appliance.
- Do not heat glass jars and canned food. Created pressure may cause the jar to explode.
- Do not put the tray close to combustible materials or oxidizers after cooking.
- The oven door may consist of 2, 3 or 4 glasses. Do not use the oven door with a removed glass.
- The user should not carry the oven on his/her own without gloves.

Purpose of Use

The appliance is intended for cooking. Do not use it for purposes such as heating.

- The appliance has been designed for domestic use. Use it only in a closed area.
- The oven can be used for defrosting, frying or grilling the food.
- Do not use the oven for drying purposes by hanging a towel or clothes on its handle.

2. Environmental Protection

Saving Energy

To learn what should be done while cooking a food in the oven, first of all, we need to talk about pre-heating. You should apply pre-heating only when it is required. Pay attention not to apply pre-heating for more than 10 minutes.

- Before cooking, put the frozen food in the oven after you leave them at the room temperature or defrost them in the microwave oven.



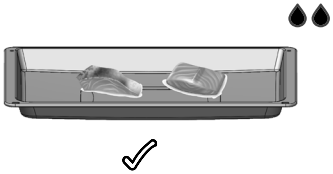

- Do not leave unnecessary accessories in the cooking compartment.

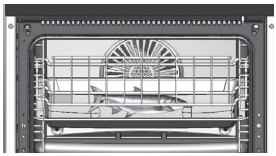

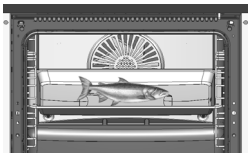

- You can cook more than one food on the wire rack at the same time. Thereby, you save heat.

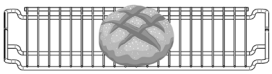



- The oven door causes heat loss every time it is opened. For this reason, you should not open the oven door unless it is highly necessary. When you need to open the oven door, pay attention to close it as soon as possible.





Compliance with AEEE regulations and Waste Disposal



Dispose of the old product in a way not harming the environment. On this product, there is a symbol (WEEE), which indicates that electrical and electronic equipment wastes should be collected separately. This means that the equipment should be handled in accordance with 2002/96/EC EU Directive for recycling or dismantling in order to minimize the impacts of it on the environment. For further information, please refer to local or regional authorities. The electronic products, which are submitted for controlled waste collection, pose a potential hazard in terms of both environmental health and human health due to the harmful materials they contain.

You can consult with your authorized dealer or the garbage collection centre of your municipality about how you can dispose of the product. Before dumping the product, cut the power plug and break the door lock, if any, so that the children are not exposed to danger.

Burner Specifications		Oven Burner	Grill Burner
G20	Injector	Ø1.10	Ø1.10
20 mbar	Heat Input	2.3 kW	2.2 kW
G20	Injector	Ø1.03	Ø1.03
25 mbar	Heat Input	2.3 kW	2.2 kW
G25	Injector	Ø1.10	Ø1.10
25 mbar	Heat Input	2.3 kW	2.2 kW
G30	Injector	Ø0.73	Ø0.73
30 mbar	Heat Input	2.3 kW	2.2 kW
G30	Injector	Ø0.65	Ø0.65
50 mbar	Heat Input	2.3 kW	2.2 kW
G31	Injector	Ø0.73	Ø0.73
37 mbar	Heat Input	2.3 kW	2.2 kW
G25.3	Injector	Ø1.10	Ø1.10
25 mbar	Heat Input	2.3 kW	2.2 kW

Technical Specifications		
Oven	Gas	Gas+Electric
Voltage/Frequency	220-240 V -50-60Hz	
Current	min 0,1A - max 16A	
Cable type	3x0.75 with Type G	3x1,5 with Type G
Class	I	
Product dimensions (height/width/depth)	595*595*547 mm	
Energy Class	A	
Lamp	25 W	
Cooling Fan Motor	16,5 W	
Turbo Fan Motor	27 W	
Chicken Roast Motor	6 W	
Upper Heating Element Power Consumption	Electric -	Electric 1,1 kW & 2,45 kW
	Gas 2,2 kW	Gas -
Lower Heating Element Power Consumption	Electric -	Electric -
	Gas 2,3 kW	Gas 2,3 kW
Gas category	Cat II 2H3B/P - Cat II 2H3+	Cat II 2H3B/P - Cat II 2H3+
Gas type/pressure	G20/20 mbar	G20/20 mbar
Type of conversion gas	G30/28-30 mbar	G30/28-30 mbar
Total gas consumption	2,3 kW	2,3 kW
Oven electrical power consumption	70 W	low grill; 1170 W high grill; 2520 W

3.Installation Manual

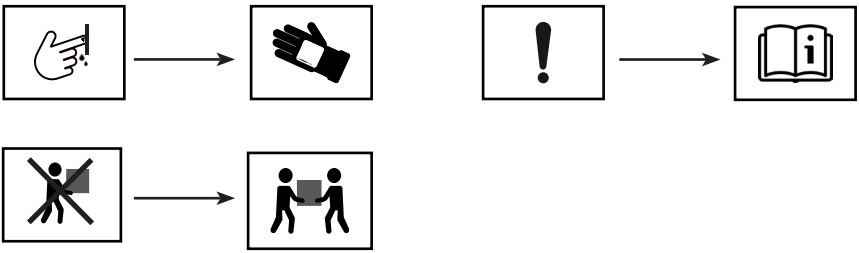

Appliance Dimensions

1

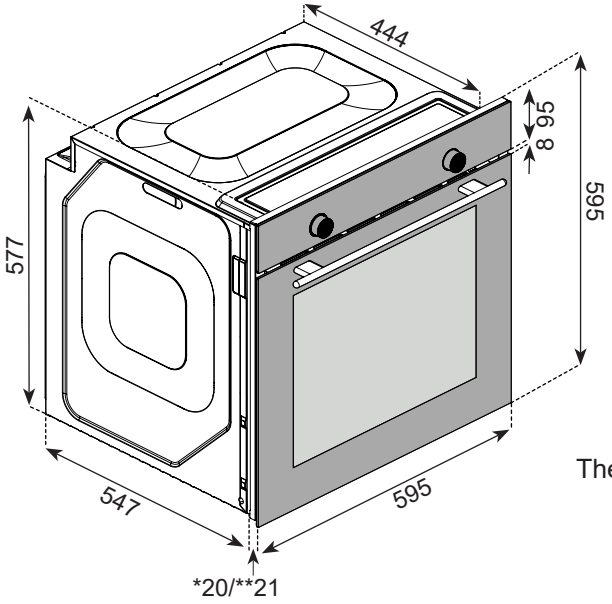

The dimensions mentioned in the image are in mm.

* 20 mm Glass Panel
** 21 mm Inox Panel

2

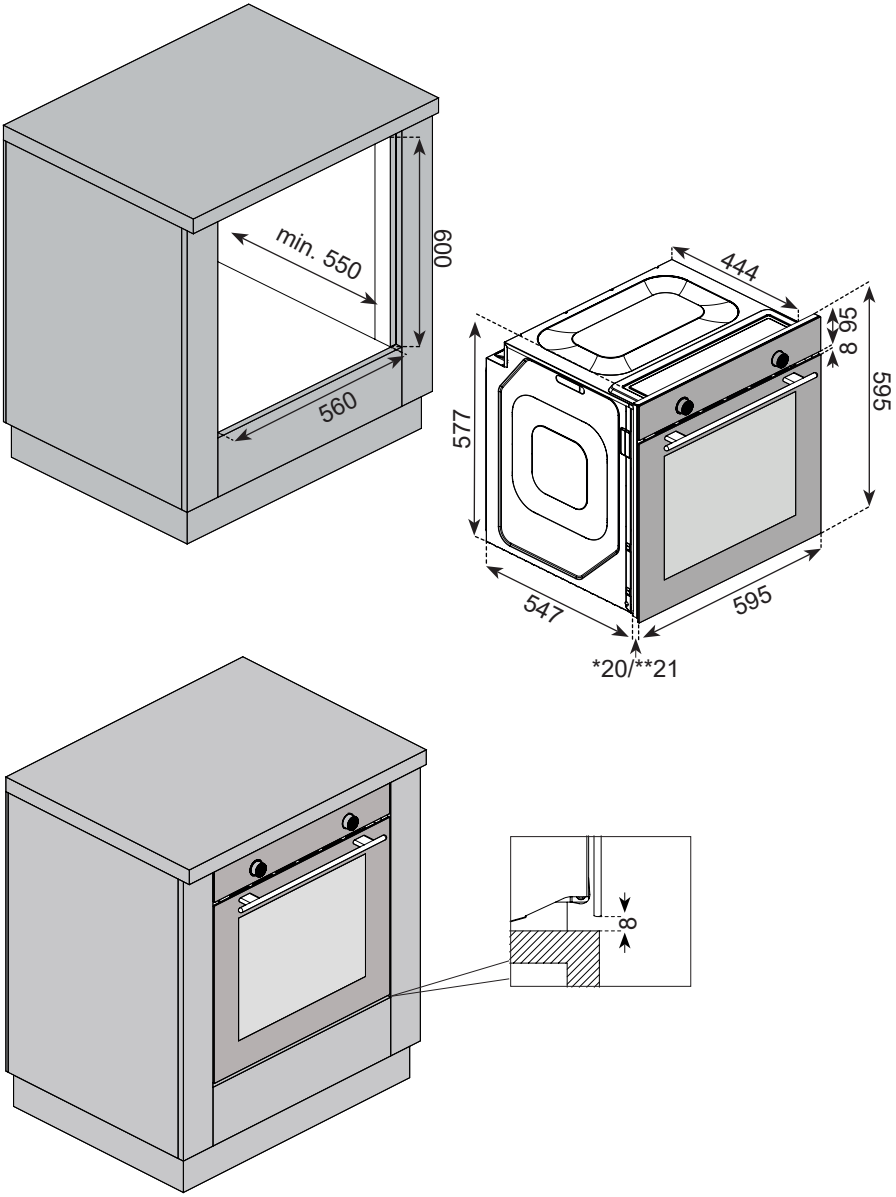

3

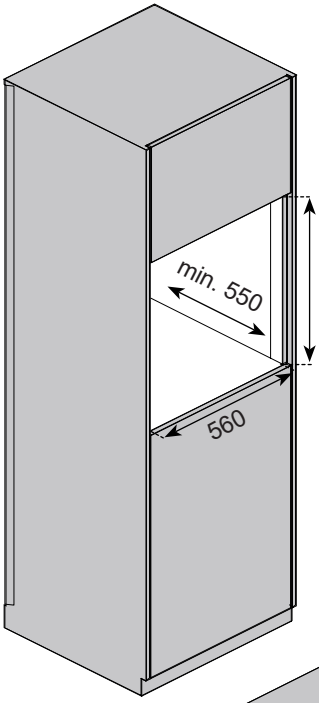

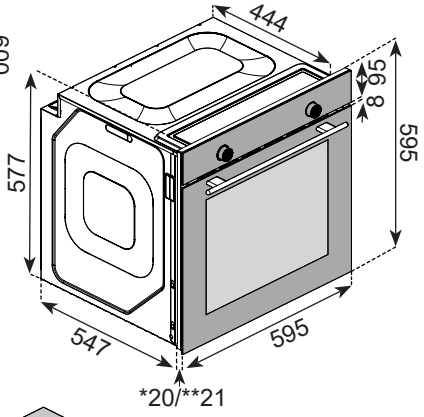

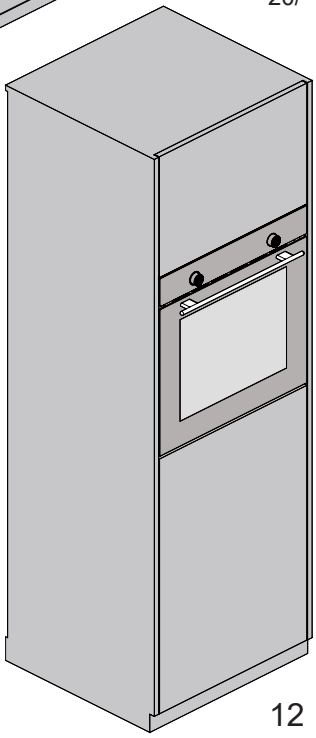

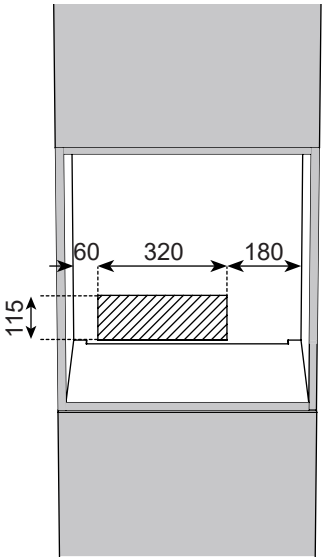

4

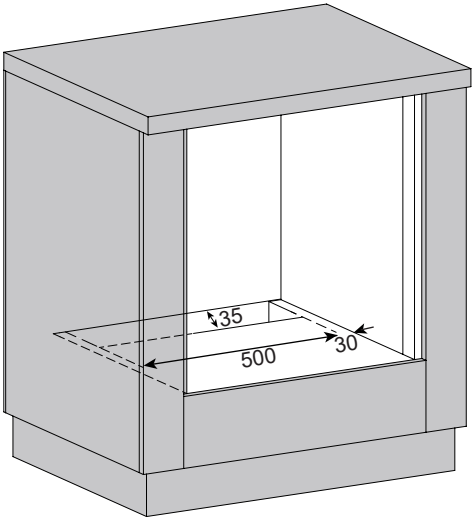

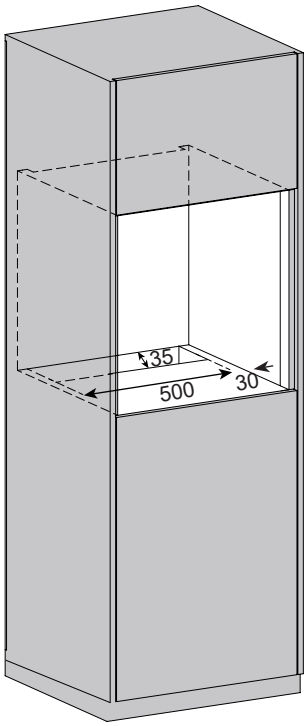

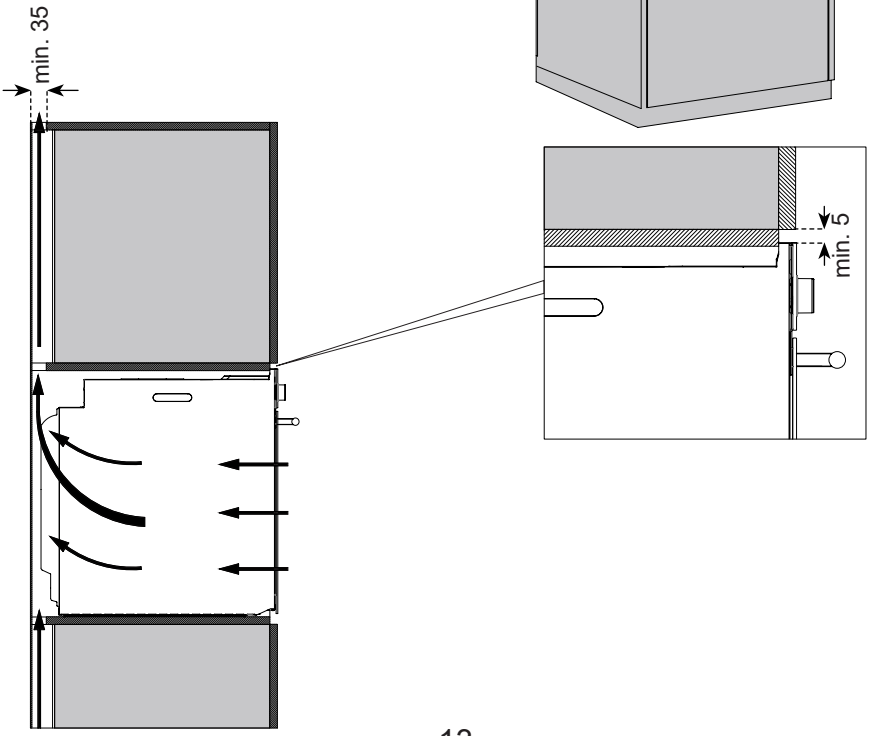

5

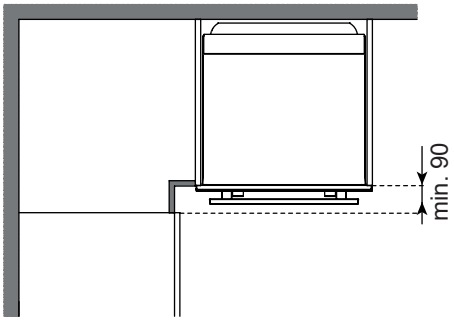

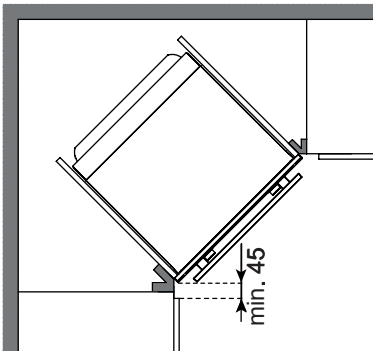

6

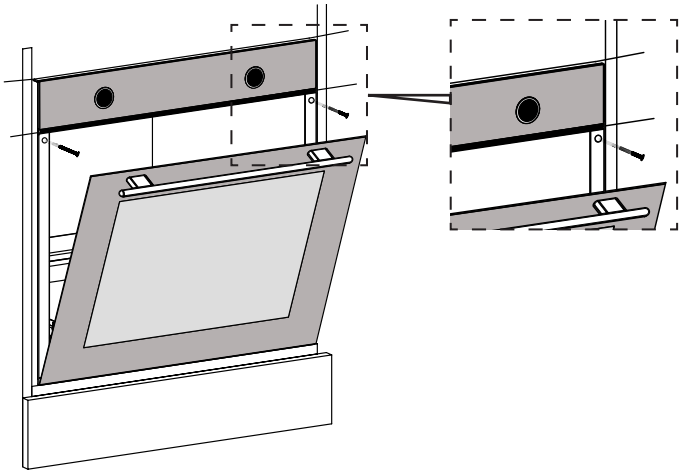

Important Warnings

Check the suitability of the electric and gas wiring to make the appliance ready for use. If it is not suitable, call a plumber and have him make the required arrangements. You shall use the appliance safely when you install the appliance as described in the installation manual. The person, who installs the appliance, is responsible for the malfunctions occurred due to incorrect installation.

⚠The customer is responsible for preparing the place where the appliance would be put and the electric and gas wiring.

⚠Our manufacturing company is not responsible for the problems that may occur due to the operations performed by the people other than the authorized ones and the warranty shall be deemed as invalid.

- Carry the appliance together with at least two people. Do not hold it by the handle.
- Lift the appliance while carrying so it does not damage the floor.
- The appliance should be checked after its package is opened. In case of a damage, it should not be installed.
- The components may be sharp, wear protective gloves during installation.
- The appliance should be installed in accordance with the rules related to the electricity and gas mentioned in the local standards.
- The dimensions mentioned in the image, are in mm.
- Kitchen cabinets should be on the same level with the appliance and fixed.
- Do not mount the appliance in a decoration or closed furniture. It is dangerous due to overheating.
- The furniture, where the installation would be applied, (**min. 100ºC**) should be made of durable material.
- It is not recommended to install the appliance close to the cooler. The performance of these appliances should be impacted negatively due to the heat.
- Before installation, make sure that the local distribution conditions (the nature of the gas and the gas pressure) and the setting of the device are compatible.
- Gas appliances and systems should be checked regularly for proper operation. The hose and its clamp, the regulator, should be checked regularly and replaced within the periods recommended by the manufacturer.
- It should be used in a room where there is a properly adjusted and working Carbon Monoxide sensor. Good combustion is required in gas appliances. in case of incomplete combustion, carbon monoxide (CO) may be formed. It is a colorless, odorless and poisonous gas that has a lethal effect even in very small doses.
- Make sure that the Carbon Monoxide sensor is working properly, and the battery, if any, is full and maintained. Install the sensor at a maximum distance of 2 meters from the device.
- All rooms require an openable window or equivalent ventilation. The combustion air is taken from the room air and the exhaust gases are released directly to the room. Good ventilation is very important for the safe operation of your device.
- It should have a ventilation opening of 175 cm². This opening can be provided in the form of a grille, doorway, etc. If there is a ventilation opening lower than this value, the product cannot be used. If your gas oven is in the same room, this value should be higher.

⚠ Do not light the device or appliance during a power outage.

Installing Below Counter (Figure 2)

- The cabinet should be in compliance with the dimensions mentioned in figure 2.
- You need to unload the rear compartment of the cabinet in the dimensions mentioned in figure 2 for necessary ventilation.

Installing Into A Tall Cabinet (Figure 3)

- The cabinet should be in compliance with the dimensions mentioned in figure 3.
- You need to unload the rear compartment of the cabinet in the dimensions mentioned in the figure for necessary ventilation.
- Moreover, if there is a back panel in the tall cabinet, it should also be removed.

Ventilation (Figure 4)

In order for you to get better efficiency from your oven, there

should be adequate cold air intake. Leave suitable spaces according to the dimensions mentioned in Figure 4.

Installing On The Corner (Figure 5)

- The installation should be in compliance with the specified dimensions to perform the installation mentioned in Figure 5 and to be able to open the appliance door.

Fixing The Appliance (Figure 6)

- Center the appliance and push it completely into the furniture.
- Power cable should not be bent under the oven and between the oven and the furniture.
- Open the appliance door.
- Fix the appliance with the screws provided along with it.

Screw the appliance into the holes, which are shown in figure 6.

Make sure that the oven is fixed. Otherwise, there is a risk of tilting during use.

Last Checks

- Turn on the electricity after performing the installation.
- Read the user manual for using the appliance.

Removing The Appliance

- Turn off the electricity.
- Remove the fixing screws.
- Lift the appliance together with at least two people by pulling it out.

Future Carrying Procedures

While carrying the appliance in the future;

- Retain the original box of the appliance. In case there is no original box, tape and wrap it with a bubble packaging or a thick cardboard tightly.
- If there is an accessory in it, place a cardboard in the size of the oven door so the oven door is not damaged. Tape the door to prevent it from opening.

⚠ Do not lift the oven by holding its handle or door.

⚠ Do not place an item on the product, carry it uprightly.

Connecting The Gas Hose

- Before starting any work related to the gas installation, turn off the device.

⚠There is a risk of explosion.

⚠ When checking for gas leakage; never use lighters, matches, burning cigarettes or similar flammable substances.

- Connect your device so that it is close to the gas connection and there is no gas leakage.
- The length of the hose to be used shall not exceed 125 cm.
- If a clamp connection is to be made, first attach the clamp to the hose. You can dip one end of the hose in boiling water for about one minute to soften it
- Then pass the softened end of the hose completely to the hose end of your product. Finally, tighten the clamp completely with a screwdriver. Apply the same process to the other end of the hose.
- Flame should be blue and burn properly. If the flame is yellowish, see if the burner cover is fully in place.
- Apply soapsuds to the port. If there is any kind of leakage, foaming occurs in the soapy area. Reconnect with a different hose and clamp.

LPG Connection

Make sure that the gas hose and gas hood that you will use in your oven are reliable. Attach the gas hose to the hose head behind the oven and tighten it using a metal hose clamp and a screwdriver. Make sure it is tightened.

NG (natural gas) Connection

Put a seal on the end of the main gas pipe and the end of the gas hose and tighten it.
In cases where it is necessary to use an elbow; connection is made by placing it between the main gas pipe and the gas hose.

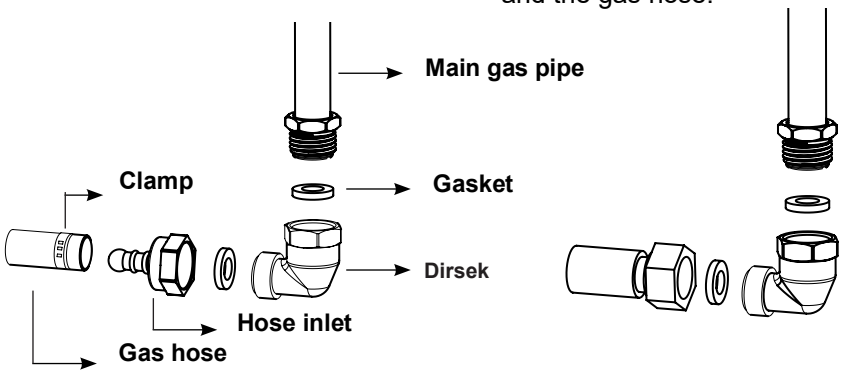

⚠The pressure of the detector to be used for PG must be 300 mmSS and certified.

⚠ If you want to convert your device from LPG to natural gas or from natural gas to LPG, please contact the nearest service shop and make the necessary gas conversion settings.

Injector Replacement

- To change the gas type of the device, change the injectors and adjust the flame setting up to the valves in the low output position.
- The reduced flow setting for the gas oven is important for the proper operation of it.

In order to ensure security these procedures must be carried out carefully

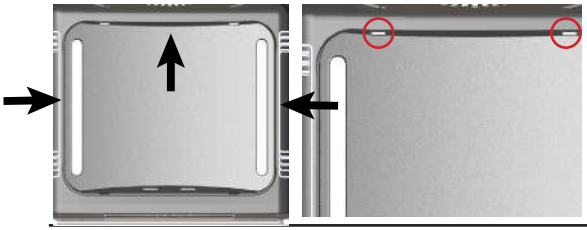

1. Lift the tabs on the back side of the lower burner housing and pull it towards the top by pressing as indicated by the arrow.

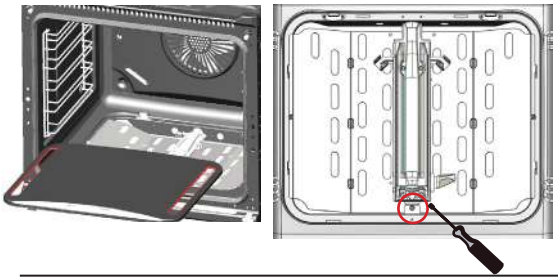

2. Remove the bottom burner by loosening the screw shown with a screwdriver. Do not apply force to the cable.

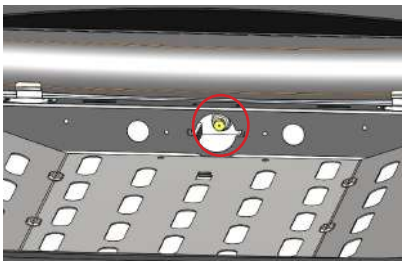

3. Replace the injector shown in the figure by removing it with a socket screwdriver.
Then insert the bottom burner and install the screw.
The injector type is given in the technical specifications table.

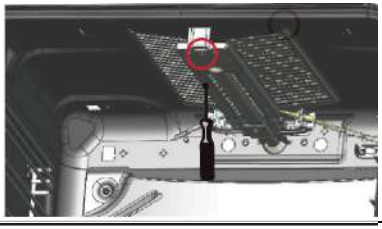

1. Remove the shown screw with a screwdriver and pull the top burner towards you.



2. Replace the injector shown in the figure by removing it with a socket screwdriver. Then insert the top burner and install the screw.

Gas Conversion

Reduced flow adjustment for gas oven



• Remove the gas oven control button by pulling it towards you.

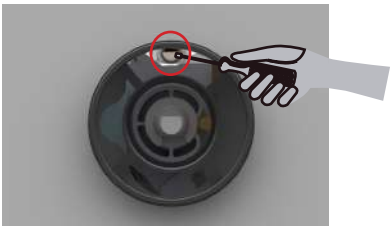

• Use a screwdriver of the appropriate size to adjust the flow rate.
• Turn the screw clockwise for LPG. For natural gas, you have to turn the screw counter-clockwise once.
If the flame is higher than the desired position, turn the screw clockwise.

⚠Power grid should be disconnected during installation. Do not connect it until the installation ends.

- The appliance should be installed correctly by the authorized service technician in accordance with the specified instructions.
- Do not pass the connection cables over the hot surface. When the cables melt, they may cause a short circuit or a fire.
- If the cables are damaged, they should be replaced by an electrician.
- They should be plugged into an (grounded) outlet in the grounding system in accordance with the rules. If there is not a suitable outlet, call the electrician and have your electrical wiring checked.
- Make sure that your plug is grounded.
- The company is not responsible for the damages incurred by the ungrounded outlets where the appliance is plugged in.
- **If the product has a cable and a plug;** an electrical connection is established by plugging the appliance in a grounded outlet.
- **If the product has a cable but not a plug;** cabling should be performed by an expert suitably.

4.Introducing the Appliance

General Overview

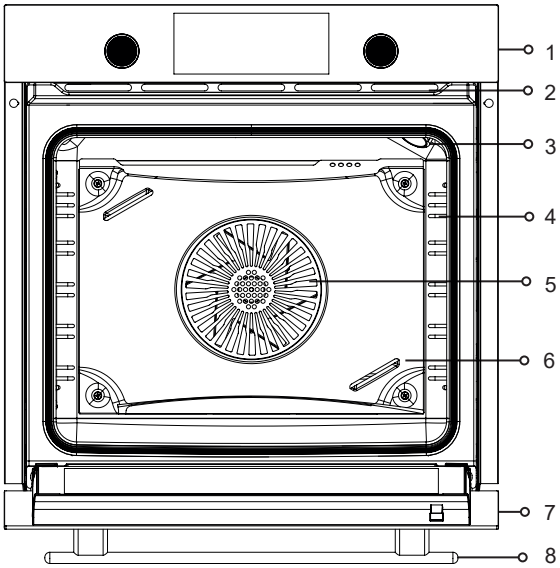

1-Control Panel	5-Fan
2-Air Vents*	6-Fan Protection Sheet **
3-Oven Illumination***	7-Cover
4-Racks****	8-Handle

***Air Vents** may be open/closed depending on your model.

It may not be available depending on your ****FPS** model.

The position of the *****Oven Illumination** may vary.

******Racks** may vary depending on your model. Wire rack is demonstrated as an example.

Control Panel

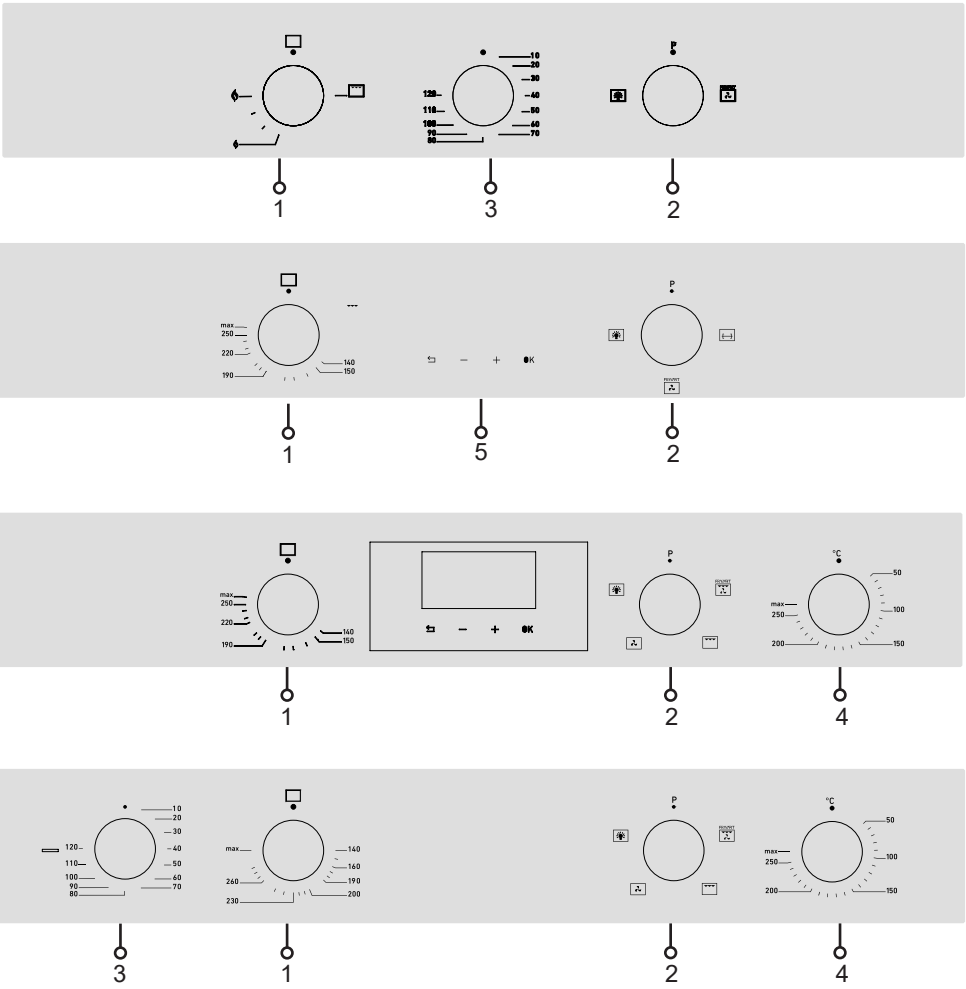

1-Gas oven/grill control button	2-Function selection button
3-Mechanical timer	4-Temperature adjustment button
5-Digital timer	

Gas oven/grill control button
This is the button that determines which heater is used to cook the food.
Function Button
Heating/cooking type is adjusted with function selection button.
You also need to set temperature button to a value with function selection button. Otherwise, the product will not start to heat.
Temperature Button
It allows you to select the temperature of the oven. The cooking is started by selecting the function type.
Mechanical - Digital Timer
It allows you to set the time for the meal to be cooked. It does not stop cooking, it is only for reminder purposes.
Turning off the Electric Oven
Switch the function and temperature buttons to zero (turned off) position.

Heating Types And Functions

	By	Iced food is defrosted using only a fan, without an oven burner.
	Oven Illumination	It helps to illuminate the inside of the oven. When you switch it to the oven illumination position, the heaters and the fan do not operate. The light will remain on as long as the oven operates
	* Fan Supported Big Grill	The grill and fan operates together. The fan distributes the hot air evenly. It is convenient for cooking large sized meat dishes.
	Grill	Grill and oven illumination work together. It is convenient for grilling and frying big and medium portion meals.
	Chicken Roast	Grill and oven illumination work together. Meat, chicken, etc. placed on skewers are fried and cooked evenly.
FRY/ART	FryArt	By using very little or no oil, it ensures that the outside of the dishes is crispy and the inside is soft.

The functions, which are available on the table, may vary in the different appliances, they may not be available in every model.

*The related energy value in the fan supported cooking mode has been indicated based on this function. The performed tests have been based on TS EN 60350 standard and (EV) No 66/2014 regulation.

Use of Mechanical Timer

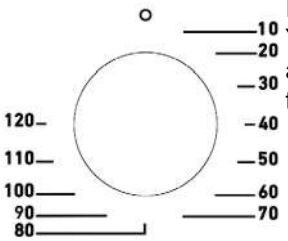

It allows you to set the time for the food to be cooked. You can select the temperature and cooking type and adjust the cooking time by turning it clockwise. When the time is up, it rings.

5. Use of The Oven

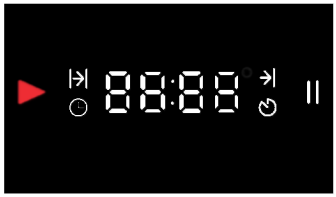

▶	"In progress" indicator	⏸	Pause indicator
⏐→	Cooking duration indicator	↰	Back button
→⏐	Cooking completion indicator	OK	OK button
🕒	Clock setting indicator	+	Time increasing button
⏰	Alarm indicator	−	Time decreasing button

*The programmed cooking feature on the digital clock is only valid for electrical functions.

First Use

Clock Setting

ⓘ Apply the clock setting before starting to use the oven.

All numbers light up and go out for 2 seconds after establishing the power connection. 12:00 appears on the screen.

ⓘ −/+ buttons, you can change the time more quickly.

Firstly, the minute is entered and it is confirmed with **OK** button and you switch to the clock.
As the minute field flashes, when you press on ⮌ button for a short time, the clock setting shall be terminated without recording any data.In order to return to the minute field while performing the clock setting, press on ⮌ button for a short time.

ⓘ As long as the clock data are not confirmed, the screen shall stay as the setting screen.
ⓘ In case of a power failure, the time of the day is cancelled and you should apply the setting again.



Firstly, select the minute with −/+ **OK** button.



After that, select the clock and confirm it with **OK** button.

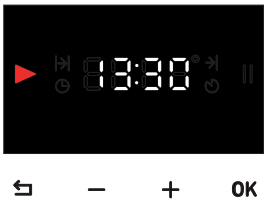

The time of the day appears.

The clock is set and ◷ indicator disappears.
The brightness on the screen decreases 1 minute after the setting is applied.
Afterwards, you can change the time of the day from **'Settings Mode'**.

First Heating

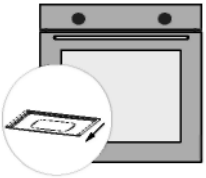	Remove the labels and take out the accessories before using the oven.
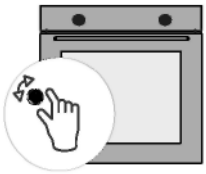	To remove the smell of the new appliance, to remove possible oil residues from the oven burner, turn the oven to the maximum temperature and run it for 30 minutes. Do the same process in the grid. Turn off the electrical supply and wait for it to cool down.
	After that, wipe the oven with a damp cloth and dry it. Refer to “Maintenance and Cleaning” section and review it detailedly.
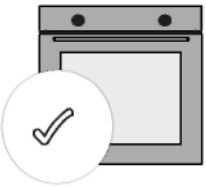	You need to be careful while opening the oven’s door because vapour may arise after heating. Place the accessories. Your oven is ready to use.

⚠⚠The surfaces become warmer than normal during the first operation. For this reason, do not touch the oven and keep the children away.

Oven Burner

Performs the normal “oven baking” process. You can cook your meals using the up-feed heating. The gas flow to the burner is regulated by a thermostat, which allows to keep the oven temperature constant.

Use of the Gas Oven

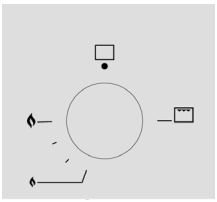

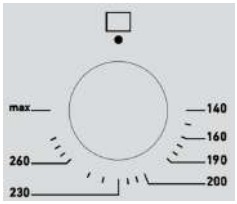

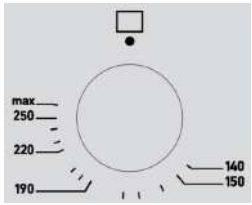

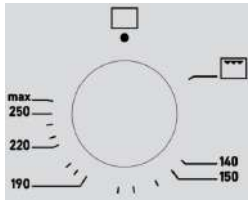

Figure1 **Figure 4**

The gas oven is ignited automatically by the control button. In the closed position control button. In the closed position (top), the gas supply is turned off.

⚠Open the oven door. The oven door should be open during this process. Ignition is performed when the door is open.

Press and hold the gas oven control knob and turn it counterclockwise. (figure1)
If your oven faucet has a grill position as in Figures 1 and 4; turn it clockwise.

- A spark forms and the gas ignites.
- Press and hold the button for another 3 to 5 seconds,
- To cook, set the value shown in the cooking table.
- Check that the oven burner is lit; if not, turn the switch back to the off position and repeat from step 2.

⚠ *If the burner does not ignite within 15 seconds, turn off the switch and wait for 1 minute for the accumulated gas to dissipate.*

- After firing the oven, set the cooking temperature by closing the door slowly.

Operation of the Grill

To turn on the grill;
The grill is ignited automatically by the control button.

- Open the oven door.
- Press and hold for the grill and turn it clockwise. There is no temperature setting for the grill, it always burns at maximum power.
- The ignition spark is generated and the gas is ignited.
- Press and hold the button for 3 to 5 seconds and make sure that the grill ignites.

To turn the grill off;

- Turn the function button to the off position.

If there is a smell of gas, what needs to be done

- Do not attempt to burn any device.
- Do not touch any electrical switch.
- Open the doors and windows.
- Call your gas supplier using the phone outside the house and proceed with the gas supplier's instructions.
- If you cannot reach your gas supplier, please call the fire department.
- Installation and service must be carried out by an authorized installer, service or gas supplier.

Use of Digital Timer



It is an electronic timer that gives an audible warning when the food to be cooked is ready at the desired time. The oven does not turn off automatically and you should observe it.

⮌ – + OK

Automatic Cooking Programme

After selecting the temperature and function which are suitable for the meal you put in the oven, you shall start cooking immediately by adjusting the cooking duration. **In order to adjust the cooking duration;**



|→| press and hold OK button until .... indicator appears.



Firstly, select the minute with –/+ buttons and activate the clock by pressing on OK button. (e.g.; 40 minutes)



with OK button, move forward until the screen above appears and start the cooking.

• The time, which is set on the screen, starts to count down.
Adjust the temperature and the function you desire.

• When the adjusted time is up, 00:00 appears on the screen, II indicator flashes and it gives an audible alarm for 2 minutes. In order to turn off the alarm, press on OK button. After turning it off, the time of the day appears on the screen.
• When the cooking ends, switch the temperature and the function to the closed position and turn off the oven.

ⓘ In order to complete the cooking before the adjusted time and cancel the selected time, long press on the ⮌ button. The time of the day appears on the screen after the programme is cancelled.

Pause Mode

When the screen indicates the time of the day and you long press button, the time of the day and ⮌ symbol appear and the oven switches to pause mode. In this case, you cannot cook. When you press on OK button for a short time in order to exit the mode, ▶ symbol appears and is deactivated.
ⓘ Operation continues while the commutator is turned on.

Manual Cooking Mode

You can start cooking immediately without adjusting the duration by selecting the temperature and the function which are suitable for your meal. The oven does not turn off automatically and you should observe it.

ⓘ In case of a power failure, your oven shall be deactivated and the clock shall be reset. You should adjust the time of the day again when the power is back on.

Alarm Setup

Alarm can be set at any time. You can use it as a warning or reminder.
The alarm indicator shall go out after the alarm rings for 2 minutes. Until the indicator appears, press and hold OK button.



OK with button move forward until the indicator appears.



Firstly, select the minute with – /+ buttons, by pressing on OK button, select the hour and confirm it with OK button.

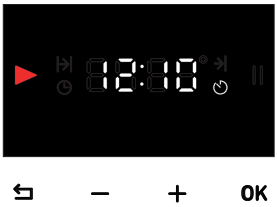

After the duration is adjusted, the screen indicates the time of the day.

Turning Off The Alarm

The alarm shall ring for 2 minutes after the adjusted time is up. In order to turn off the alarm, you can press on OK or button. After turning it off, the time of the day appears on the screen.

Setting Mode

Alarm Tune Setting (AL)

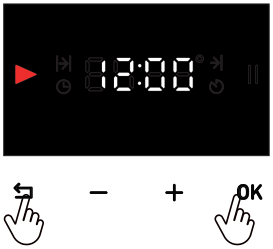

Long press and OK . buttons together and enter the menu.



With –/+ buttons, proceed to AL option and confirm it with OK button.



With –/+ buttons, select the level you desire and confirm it with OK button.

Changing The Time (CL)



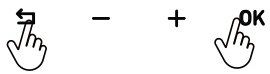

Long press ⮌ and OK . buttons together and enter the menu.





With –/+ buttons, proceed to CL option and confirm it with OK button.



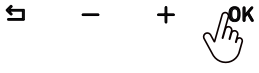

Select the minute and the hour with –/+ buttons and confirm it with OK button.

Changing The Tone (So)



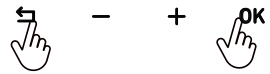

Long press ⮌ and OK . buttons together and enter the menu.





With –/+ buttons, proceed to So01 option and confirm it with OK button.



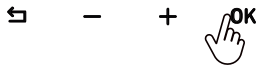

With –/+ buttons, select the level you desire and confirm it with OK button.

Changing The Brightness of The Screen (Sc)



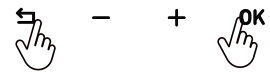

Long press ⮌ and OK . buttons together and enter the menu.





With –/+ buttons, proceed to Sc01 option and confirm it with OK button.



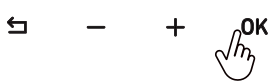

With –/+ buttons, select the level you desire and confirm it with OK button.

6.Accessories

ⓘ The accessories, which are provided based on the model of the appliance, vary. The accessories, which are mentioned in the user manual, may not be available in the product.

ⓘ Use the original accessories, which are designed for the appliance.

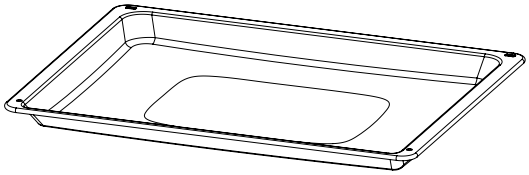	**Standard Tray** It is intended for frozen food, cakes, large sized meat dishes, pastries.
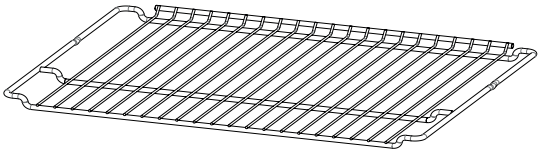	**Wire Rack** It is intended for cake and soufflé moulds and for placing the food to be fried on the rack.
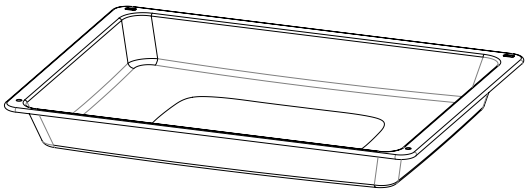	**Deep Tray** You can use it for stews, fried food in large pieces and for collecting the dripping oils when you grill the food.
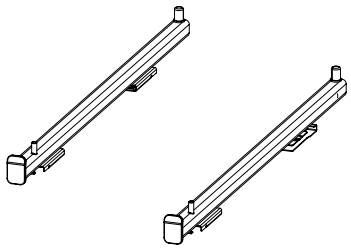	**Telescopic Rail** Telescopic rails can be pulled completely out of the oven. Control your meals by easily moving your tray and wire grill.

Use of Accessories

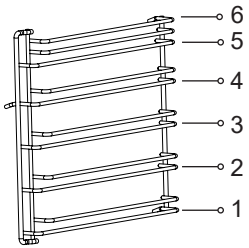	There are models with wire and self adjusting racks. Wire rack has 6 cooking rack.
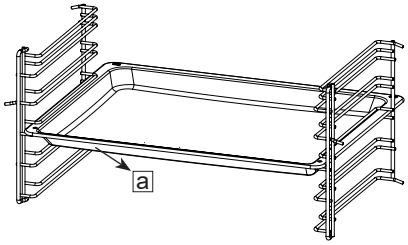	Accessories should be placed between two racks and the side with a inclination should face the door of the appliance.
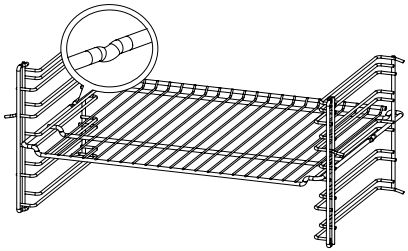	The cavities on the wire rack prevent it from falling off the racks and ensure the safety.
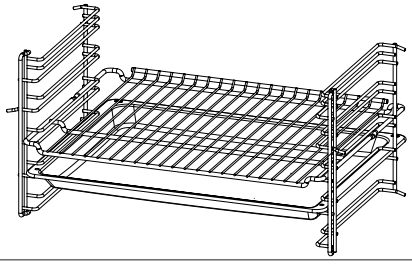	You can use the tray as a drip tray for grilled food and meat dishes by placing the tray and the rack together.

Use of Telescopic Rail

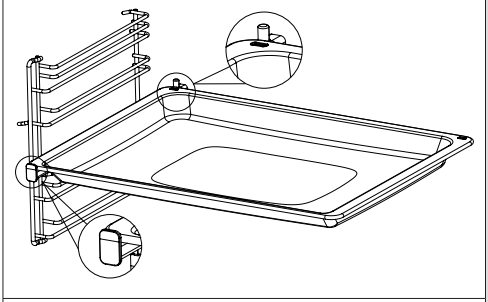

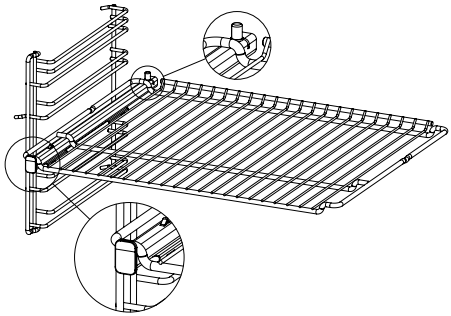

Push the rails completely inside without placing the tray and wire grid on them. Accessories must be between the front and rear overhangs of the rails.

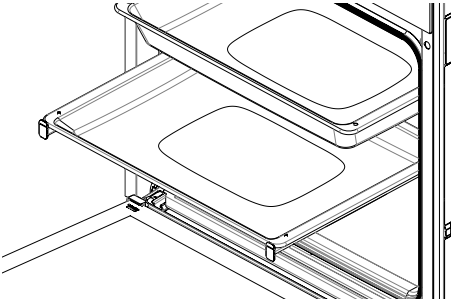

If you are going to cook with more than one tray, there should be a level of distance with the rail system.

7.Turnspit (Chicken Rotisserie)

ⓘ This feature is optional. It may not be available on your device.

<table>
<tr><td>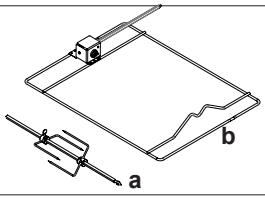
</td><td>If there is an accessory in your oven, remove the skewer (a) in the accessories from its rack (b).</td></tr>
<tr><td rowspan="2">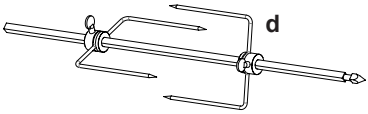


</td><td>Unloose and remove V (dovetail) shaped sheet iron’s (c) screw (d).</td></tr>
<tr><td>Center the food to be grilled on the skewer and fix V shaped sheet iron so that it shall not come loose and tighten its screw. (Max. chicken-2.5 kg)</td></tr>
<tr><td>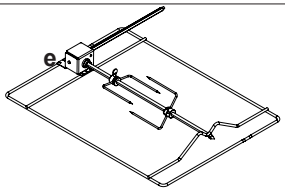
</td><td>Insert the skewer into the gearbox (e), which is available on the rack. Make sure that it is inserted.</td></tr>
</table>

- After closing the oven’s door, operate the thermostat temperature at the maximum temperature at the rack position.
- In order to collect the dripping oils, place the tray on the base and add a small amount of water to the tray.

8. Cooking suggestions

You can see the details of the food, which we have tested in our laboratories and whose cooking values have been determined by us, in the table. The cooking times may vary depending on the grid voltage, the nature and the amount of the material to be cooked and the temperature. By trying out, you can change the values to achieve different tastes and the results, which are suitable for your palatal delight.

ⓘ The lowest rack of the oven is the 1st rack.

Preheating was applied in the oven for 10 minutes before the tests.

The tests were performed with a test pressure of 1.10 enj G20-20 mbar on the bottom burner.

Food	The accessory to be used	Cooking function	Rack position	Temperature (C)	Cooking duration (min)
Cake in a mould	cake tin on wire grill	oven oven +	**3** **3**	180 180	40... 45 25...30
Cake in a tray	Standard Tray	oven oven +	**5*** **3**	170...180 170...180	40... 45 15...20
Small cakes	Standard Tray	oven oven +	5* 5*	170...180 170...180	35... 40 25...30
Cookie	Standard Tray	oven	4	170...180	20...25
Pie	glass over wire grill/rectangular mold	oven +	3	180	25...30
Phyllo based pastry	Standard Tray	oven oven +	4 4	190 190	40...45 25...30
Pastry	Standard Tray	oven	4	190...200	25...30
- Mixing leavened dough	Standard Tray	oven oven +	4* 4*	180 180	75...80 55...60
Pizza	Standard Tray	oven oven +	4 4	max max.	15...20 10...15
Fish	Standard Tray	oven oven +	4 4	200 200	35... 40 25...30
Lasagna	glass over wire grill/rectangular mold	oven	3	190	25...30

Vegetable stew	wire grill	oven	4	35 min max, then 120 min 160	150...160
Chicken drumstick	standard baking tray	oven oven +	3 3	20 min max, then 60 min 190 20 min max, then 45 min 190	80...90 65...70
Whole chicken 2 kg	standard baking tray	oven oven +	3...4 3...4	25 min max, then 70 min 190 25 min max, then 60 min 190	90...95 85...90
Entrecôte	standard baking tray	Fan supported upper and lower heating	4	25 min max, then 50 min 190	75...80

* It is recommended to cook by placing a deep tray on a lower shelf.

Grilling Table

Food	The accessory to be used	Cooking function	Rack position	Temperature (°C)	Cooking duration (min)
Lamb chops	Wire grill		4...5**	max.	15…20
Chicken in pieces	Wire grill		4...5**	max.	20…25
Fish	Wire grill		4**	max.	10…20
Sandwich loaf	Wire grill		4...5**	max.	3...6

Food is turned upside down halfway through cooking.

Turnspit Table

Food	The accessory to be used	Cooking function	Rack position	Temperature (°C)	Cooking duration (min)
Chicken roast (2kg)	chicken flip set		2	max.	100…110
Lamb bud (part)	chicken flip set		2	30 min max, then 70min 190	100…110
Turkey (parted)	chicken flip set		2	35min max, then 175min 190	210...220

9. Maintenance and Cleaning

ⓘ Before starting to perform maintenance and cleaning, disconnect the appliance from the electrical outlet against the risk of electric shock.

⚠⚠Before performing maintenance, make sure that the appliance is cold.
You can extend the lifetime of the appliance by performing regular maintenance and cleaning. You can remove the door, the glass and the racks for cleaning.

 Cleaning Recommendations	Do not use scratching, abrasive tools such as knives, brushes on the internal and frontal parts, trays and other parts of the appliance. Clean and dry the appliance with warm water and soapy, soft cloth.
 Accessory Cleaning	Clean and dry the accessories thoroughly after use. . Do not wash the accessories in the dishwasher.
 Daily Use	The appliance should be cleaned thoroughly after use. The wastes, accumulated oils may cause fire.

Removing The Oven Door

Step 1	Open the oven door fully.	
Step 2	Push the hinge locks in the direction of arrow and unlock them.	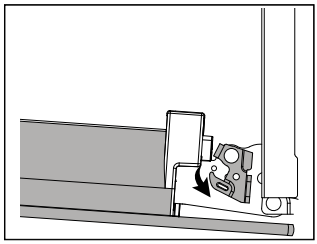
Step 3	Close the oven door until it is brought to the position in line with the hinge lock. Pull it outwards in the direction of arrow.	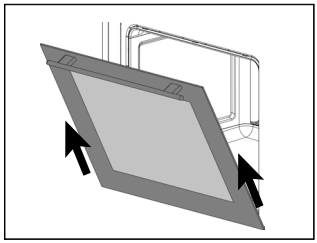

Attaching The Oven Door

Step 4	Place the appliance door into the hinges in the direction of the arrow.	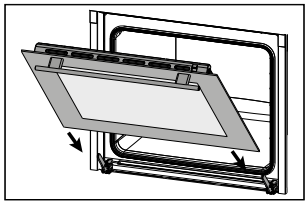
Step 5	Open the appliance door fully and switch the hinge locks to the closed position in the direction of arrow. Close the oven door.	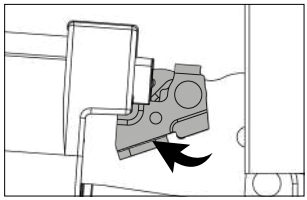

Removing The Glasses

The number of the glasses may vary according to the model.

Step 1	Open the oven door halfway.	
Step 2	By pressing on the right and left side of t he upper plastic section, pull it upwards.	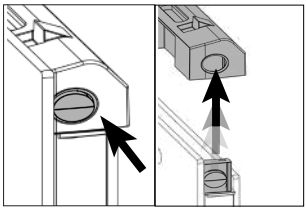
Step 3	Firstly, pull the internal glass, then the middle glass outwards in the direction of the arrow.	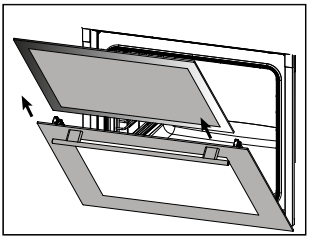

Attaching The Glasses

Step 4	Open the oven door halfway and firstly, push the interim glass, then the internal glass in the direction of the arrow.	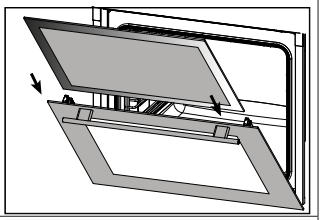
Step 5	Make sure that the glass is inserted into the housing of the lateral plastic section correctly.	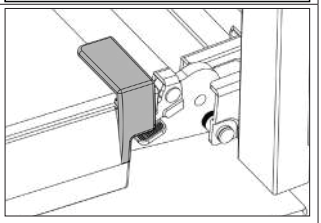
Step 6	Place the upper plastic section in a way that you can hear the click sound and close the appliance's door.	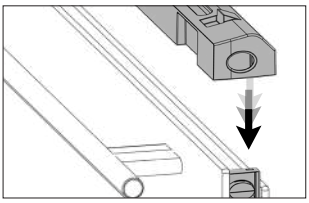

Removing The Wire Racks

⚠ The racks may be hot, do not touch the racks when they are hot. Wait for them to cool down.

ⓘ The cleaning process of the oven's side walls may vary depending on the appliance model. This feature may not be available in your appliance.

Step 1	Firstly, lift the rack carefully from the front hanger (1) in the direction of the arrow and remove it (2).	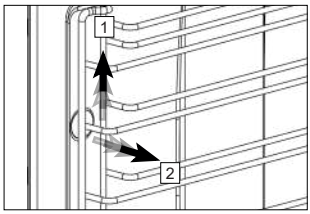
Step 2	Afterwards, pull the whole rack out in the direction of the arrow.	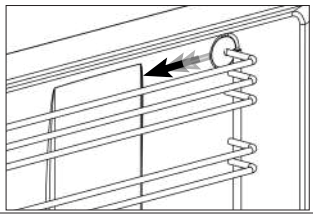

Attaching The Wire Racks

Step 3	Center the racks and firstly, place the rear hanger (1) and press on it (2).	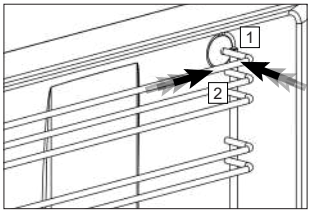
Step 4	Then, press on the front hanger. Thereby, the rack would be attached.	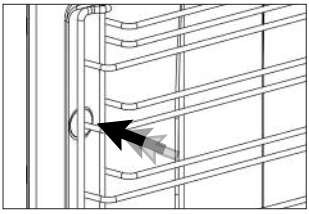

Replacing the Oven Lamp

⚠ Due to the hazard of electric shock, make sure that the power is out before replacing the lamp. The lamp may be hot, wait for it to cool down.

Step 1	Open the oven door fully.
Step 2	Turn the glass door counter clockwise and remove it. 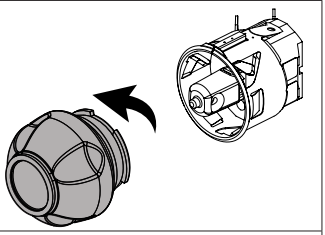
Step 3	Pull the oven lamp out in the direction of the arrow and replace it. Reattach the glass door. 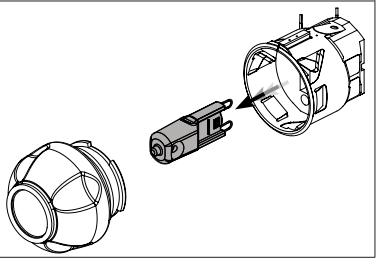

10.Troubleshooting

The malfunctions mentioned here are the situations that may occur usually. You can solve these problems easily without interfering with the product yourself.

ⓘ If the problem cannot be solved despite the instructions, call the dealer or the Authorized Service where you have bought the appliance from. In this case, never try to repair the appliance on your own.

Problem	Reason	Solution
The appliance does not operate.	The appliance may not be plugged in.	Make sure that the appliance is plugged in.
	The fuse may have blown or be broken.	Check the fuses in the fuse box. If the fuse has blown, engage it.
While the appliance operates, steam comes out.	The oven is used for the first time.	Steam may come out during operation. This is not a malfunction.
The outside of the oven becomes too hot during cooking.	It is in a place, which is not well-ventilated.	Apply the spaces, which are indicated in the installation manual.
The oven does not cook properly.	The oven door may open too much during cooking.	Do not open the door too much to ensure that the internal temperature does not decrease.
The cooling fan still operates after the cooking ends.	It operates for a while in order to ventilate the inside of the oven.	This is not a malfunction.
Metal sounds come while the appliance gets warm or cools down.	The sounds, which are heard because the parts expand as a result of the heat, are normal.	This is not a malfunction.
The door is not closed entirely.	The leftovers may be stuck inside the oven and on the door.	Clean the oven.
The oven does not heat.	• The door may have remained open. • The function or the temperature may not have been adjusted. • The power may not be supplied.	• •Check the door and make sure that it is closed entirely. • •Switch the oven to a specified temperature and/or the function.

The oven won't ignite.	The function selector may be switched off.	Turn the function selector to the on position and ignite in this way.
The grill doesn't ignite.	The function selector may be switched off. The oven door may be closed or the turbo fan may have been left running.	Set the function selector and thermostat to the grill position. Open the door and ignite by pressing the thermostat button.
Oven/grill ignites but goes out immediately.	The thermal element may have been left unactivated.	Press and hold the button for 3 to 5 seconds after the given ignition occurs.
I smell gas when the oven is running.	The burner holes may be blocked by food residues.	Clean the burner with a damp cloth. Contact the service if the gas odor persists.

WARRANTY CERTIFICATE

MANUFACTURER

Title :
ADRESS :
TELEPHONE
E-MAIL :

THE SIGNATURE AND SEAL OF THE MANUFACTURER :

THE PRODUCT'S

Type : Built-in Oven
Brand :
Model :
Label and Serial Number :
Maximum Repair Duration :
Warranty Period :

THE VENDOR'S

Title :
Address :
Phone/Fax :
E-Mail :
Invoice Date and Number :
Delivery and Sale Date :
Collective Installation :
Warranty Date :

NOTE: The warranty date field for built-in and natural gas powered products shall be filled in by authorized service staff.

DEALER AND AUTHORIZED SERVICE SIGNATURE

