USER MANUAL

AWC-30/AWC-1950 series

avelis
appliances

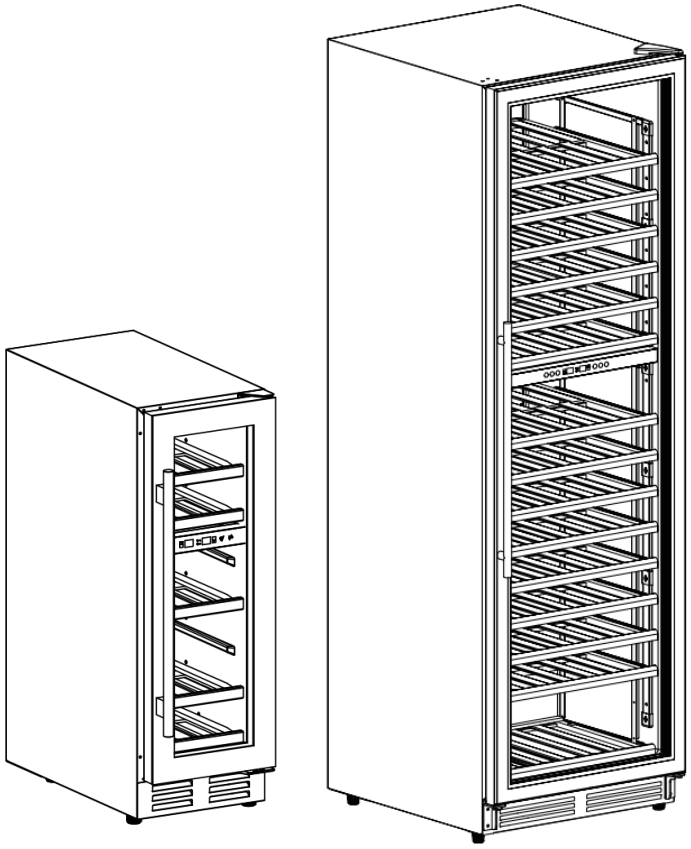

TABLE OF CONTENTS

WINE CELLAR SAFETY	3
IMPORTANT SAFE-GUIDES	4
REFRIGERANT GAS WARNINGS	5
PARTS BREAKDOWN	7
BUILT-UNDER SERIES	8
REVERSE THE DOOR	8
IMPORTANT SAFETY INSTRUCTIONS	11
INSTALLATION INSTRUCTIONS	11
Before using your wine cellar	11
Installation of your wine cellar	12
Electrical connection	12
Extension cord	13
Power bar with surge protector	13
OPERATING YOUR WINE CELLAR	13
Recommended temperature settings	13
Storage	15
Cleaning your wine cellar	15
Shelves	15
Power failure	16
Moving your wine cellar	16
Energy saving tips	17
TROUBLESHOOTING GUIDE	17-18

WINE CELLAR SAFETY

Your safety and the safety of others are very important.

We have provided many important safety messages in this manual and on your appliance. Always read and obey all safety messages.



This is the Safety Alert Symbol. This symbol alerts you to potential hazards that can kill or injure you and others. All safety messages will follow the Safety Alert Symbol and either the words “DANGER”, “WARNING” or “CAUTION”.

⚠ DANGER ⚠

Danger means that failure to heed this safety statement may result in severe personal injury or death.

⚠ WARNING ⚠

Warning means that failure to heed this safety statement may result in extensive product damage, serious personal injury, or death.

CAUTION

Caution means that failure to heed this safety statement may result in minor or moderate personal injury, or property or equipment damage.

All safety messages will alert you do what the potential hazard is, tell you how to reduce the chance of injury, and

let you know what can happen if the instructions are not followed.

IMPORTANT SAFEGUIDES



Before the appliance is used, it must be properly positioned and installed as described in this manual, so read the manual carefully. To reduce the risk of fire, electrical shock or injury when using the appliance, follow basic precaution, including the following:

DANGER

- Plug into a grounded 3-prong outlet, do not remove grounding prong, do not use an adapter, and do not use an extension cord.
- Replace all panels before operating.
- Never clean appliance parts with flammable fluids. These fumes can create a fire hazard or explosion. And do not store or use gasoline or other flammable vapour and liquids in the vicinity of this or any other appliance. The fumes can create a fire hazard or explosion.
- Before proceeding with cleaning and maintenance operations, make sure the power line of the unit is disconnected.
- Do not connect or disconnect the electric plug when your hands are wet.
- Unplug the appliance or disconnect power before cleaning or servicing. Failure to do so can result in electrical shock or death.
- Do not attempt to repair or replace any part of your appliance unless it is specifically recommended in this material. All other servicing should be referred to a qualified technician.



The symbol is a warning symbol for risk of fire/flammable material.

WARNING: When positioning the appliance, ensure the supply cord is not trapped or damaged.

WARNING: Do not locate multiple portable socket-outlets or portable power supplies at the rear of the appliance.



- Use two or more people to move and install appliance. Failure to do so can result in back or other injury.
- To ensure proper ventilation for your appliance, the front of the unit must be completely unobstructed. Choose a well-ventilated area with temperatures above 16°C (60°F) and below 32°C (90°F). This unit must be installed in an area protected from the element, such as wind, rain, water spray or drips.
- The appliance should not be located next to ovens, grills or other sources of high heat.
- The appliance must be installed with all electrical, water and drain connections in accordance with state and local codes. A standard electrical supply (220V/50Hz), properly grounded in accordance with the National Electrical Code and local codes and ordinances is required.
- Do not kink or pinch the power supply cord of appliance.
- The fuse (or circuit breaker) size should be 13 amperes.
- It is important for the appliance to be leveled in order to work properly. You may need to make several adjustments to level it.
- Never allow children to operate, play with or crawl inside the appliance.
- Do not use solvent-based cleaning agents of abrasives on the interior. These cleaners may damage or discolour the interior.
- Do not use this apparatus for other than its intended purpose.

FLAMMABLE REFRIGERANT GAS



DANGER - Risk of fire or explosion. Flammable refrigerant used.

DO NOT use mechanical devices to defrost refrigerator. DO NOT puncture refrigerant tubing.

DANGER - Risk of fire or explosion. Flammable refrigerant used. To be repaired only by trained service personnel. DO NOT puncture refrigerant tubing.

CAUTION - Risk of fire or explosion. Flammable refrigerant used. Consult repair manual / owner's guide before attempting to service this product. All safety precautions must be followed.

CAUTION - Risk of fire or explosion. Dispose of property in accordance with federal or local regulations. Flammable refrigerant used.

CAUTION - Risk of fire or explosion due to puncture of refrigerant tubing. Follow handling instructions carefully. Flammable refrigerant used.

CAUTION - To prevent a child from being entrapped, keep out of reach of children and not in the vicinity of the cellar.

PARTS BREAKDOWN

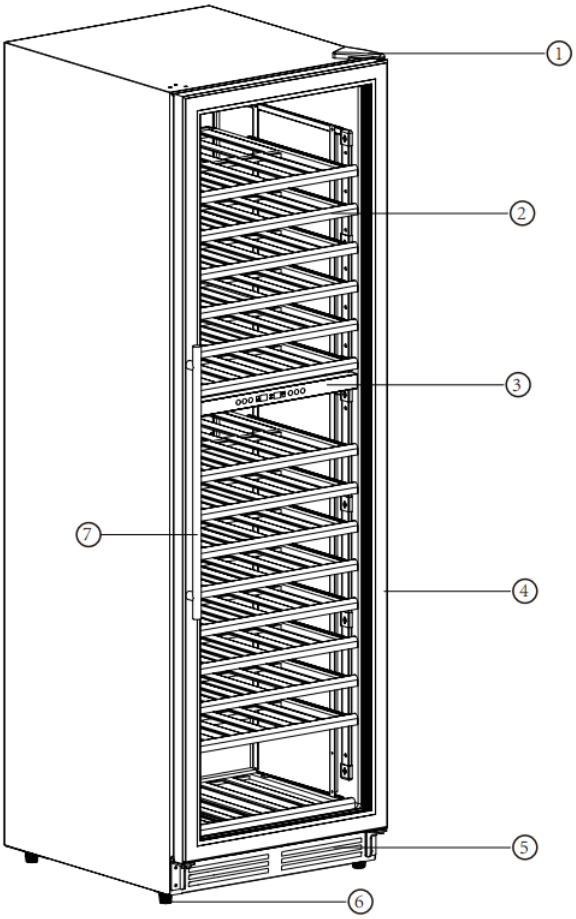

1	Top Hinge	5	Exhaust Window
2	Shelves	6	Leveling Legs
3	Control Panel	7	Handle
4	Glass Door		

BUILT-UNDER SERIES (Built under a kitchen table top)

AWC-30

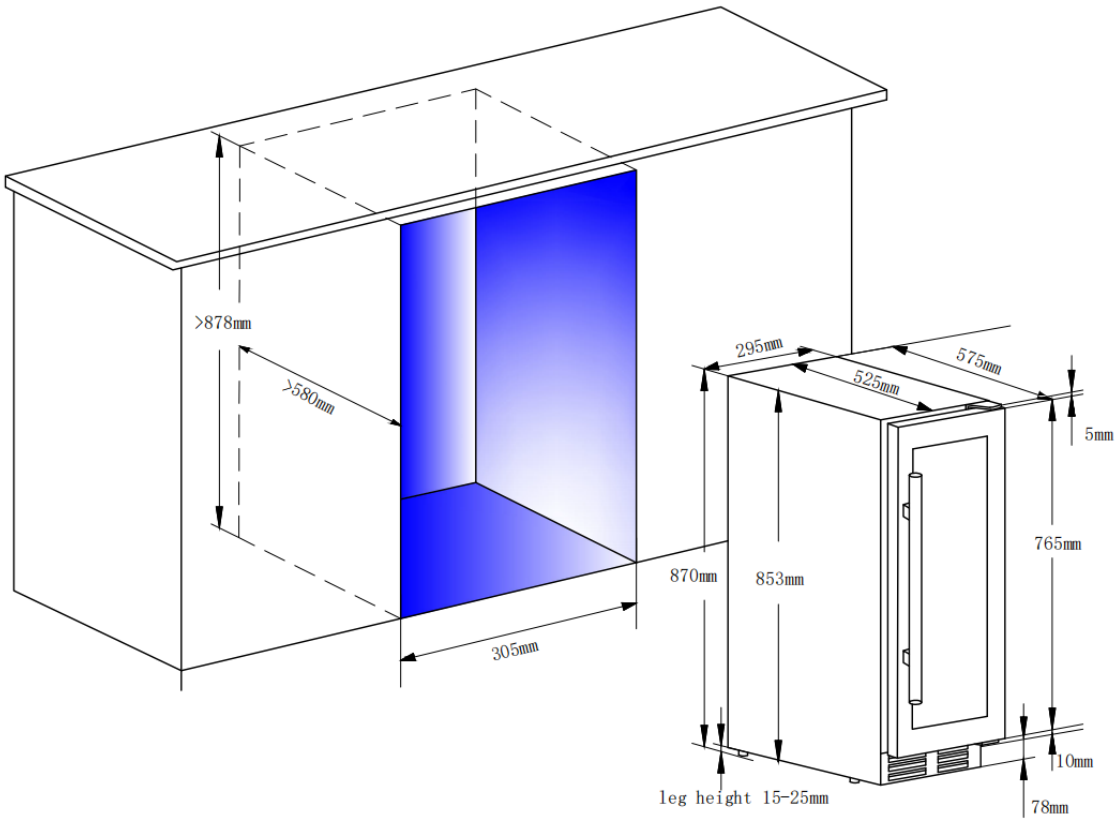

Reverse the door

1. When you change the door hinge from right to left, you will be use tools : Cross-shaped screwdriver

2. Use the screwdriver to loosen and remove the screws at the bottom hinge. Be careful to hold the glass door after remove the screws.

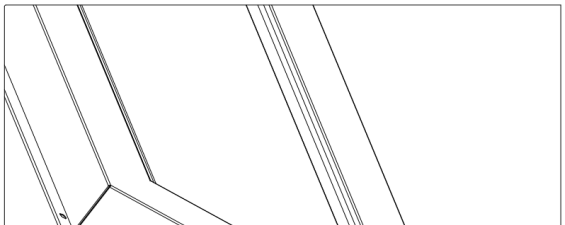

3. Lift the door and take it out from the lower hinge and place it on the mat to avoid damage and scratches. Then remove the adjustable door Shaft.

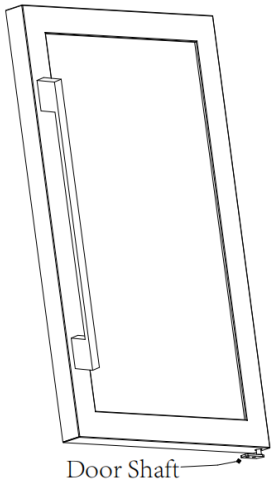

4. Unscrew the screws at the top hinge and lower hinge, and remove the the door hinge. Use a putty knife to prize up the screw hole cover which at the left side of the wine cellar, and re-cover the screw holes on the right side.

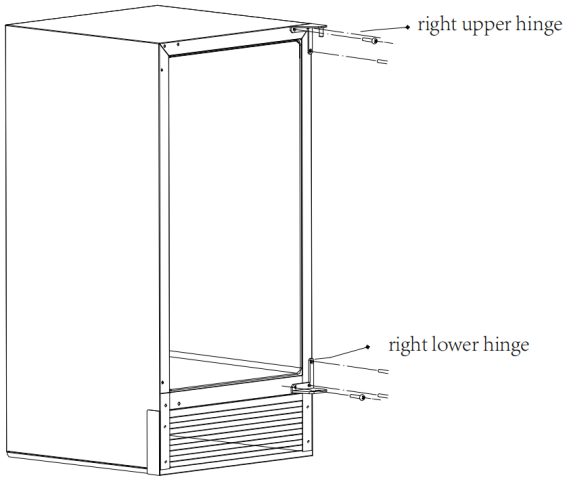

5. Install the left upper hinge and left lower hinge (include in the fittings) and tighten.

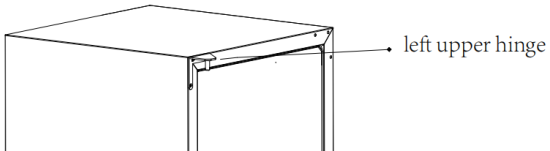

6. Rotate the door 180°, the door should installed the adjustable door shaft first, then relocate the door to the designed position.

Note: Need align the upper door hinge with the top hole position of the door first.

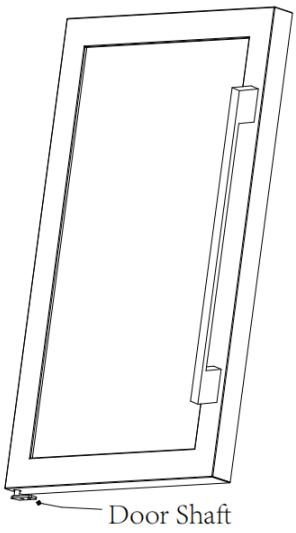

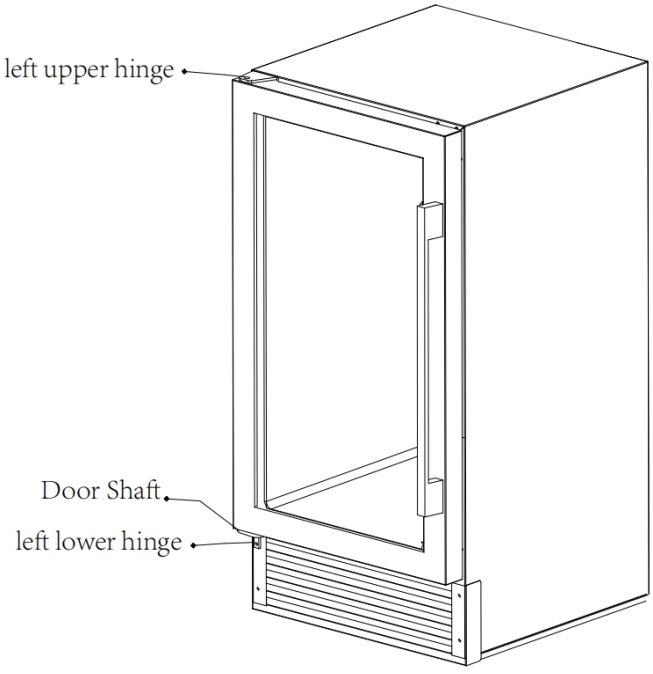

7. Adjust the door to make sure it is level with the top of the unit. Then tighten screws at the bottom.

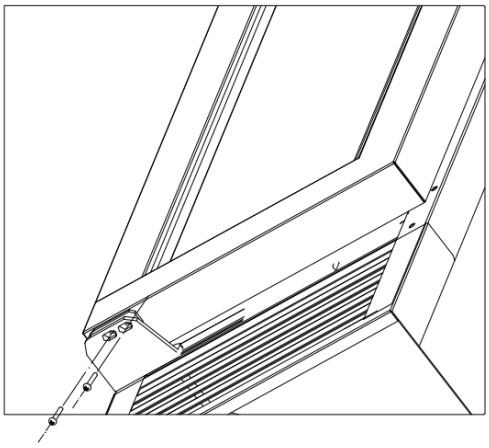

IMPORTANT SAFETY INSTRUCTIONS

WARNING	To reduce the risk of fire, electrical shock, or injury when using your appliance, follow these basic precautions:

- Read all instructions before using the wine cellar.
- **DANGER or WARNING:** Risk of child entrapment.
  Child entrapment and suffocation are not problems of the past. Junked or abandoned appliances are still dangerous.
- Before you throw away your old wine cellar, take off the door but leave the shelves in place so that children may not easily climb inside.
- Never allow children to operate, play with, or crawl inside the appliance.
- Never clean appliance parts with flammable fluids.The fumes can create a fire hazard or explosion.
- Do not store or use gasoline or any other flammable vapors and liquids in the vicinity of this or any other appliance. The fumes can create a fire hazard or explosion.

-Save these instructions-

INSTALLATION INSTRUCTIONS

Before using your wine cellar

- Remove the exterior and interior packing.
- Check to be sure you have all of the following parts:
  - Shelves
  - Instruction Manual
- Before connecting the Wine Cellar to the power source, let it stand upright for approximately 2 hours. This will reduce the possibility of a malfunction in the cooling system from handling during transportation.
- Clean the interior surface with lukewarm water using a soft cloth.
- Install the handle on the left side of the door.

Installation of your wine cellar

- This appliance is designed to be for free standing installation.
- Place your wine cellar on a floor that is strong enough to support it when it is fully loaded. To level your wine cellar, adjust the front leveling legs at the bottom of the wine cellar.
- Locate the wine cellar away from direct sunlight and sources of heat (stove, heater, radiator, etc.). Direct sunlight may affect the acrylic coating and heat sources may increase electrical consumption. Extreme cold ambient temperatures may also cause the unit not to perform properly.
- Avoid locating the unit in moist areas.
- Plug the Wine Cellar into an exclusive, properly installed-grounded wall outlet. Do not under any circumstances cut or remove the third (ground) prong from the power cord. Any questions concerning power and/or grounding should be directed toward a certified electrician or an authorized Products service center.

Electrical connection

Warning: Improper use of the grounded plug can result in the risk of electrical shock. If the power cord is damaged, have it replaced by an authorized service center.

This appliance should be properly grounded for your safety. The power cord of this appliance is equipped with a three-prong plug which mates with standard three prong wall outlets to minimize the possibility of electrical shock.

Do not under any circumstances cut or remove the third ground prong from the power cord supplied. For personal safety, this appliance must be properly grounded.

This appliance requires a standard 220V/50Hz electrical ground outlet with three-prong. Have the wall outlet and circuit checked by a qualified electrician to make sure the outlet is properly grounded. When a standard 2-prong wall outlet is encountered, it is your responsibility and obligation to have it replaced with a properly grounded 3-prong wall outlet. The cord should be secured behind the appliance and not left exposed or dangling to prevent accidental injury.

The appliance should always be plugged into its own individual electrical outlet which has a voltage rating that matches the rating label on the appliance. This provides the best performance and also prevent overloading house wiring circuits that could cause a fire hazard from overheated. Never unplug the appliance by pulling the power cord. Always grip the plug firmly and pull straight out from the receptacle. Repair or replace immediately all power cords that have become frayed or otherwise damaged. Do not use a cord that shows cracks or abrasion damage along its length or at either end. When moving the appliance, be careful not to damage the power cord.

Extension cord

Because of potential safety hazards under certain conditions, it is strongly recommended that you do not use an extension cord with this appliance. However, if you must use an extension cord it is absolutely necessary that it be a 3-wire grounding type appliance extension cord having a grounding type plug and outlet and that the electrical rating of the cord be 120 volts and at least 13 amperes.

Power bar with surge protection

Most electrical appliances use a series of electric control boards to operate. These boards are very susceptible to power surges and could be damaged or destroyed.

If the appliance is going to be used in an area or if your city / country is prone to power surges / outages; it is suggested that you use a power surge protector for all electrical devices / appliances you use. The surge protector that you select must have a surge block high enough to protect the appliance it is connected to. If you have any questions regarding the type and size of surge protector needed contact a licensed electrician in your area.

Damages due to power surges are not considered a manufacturer covered defect and will void your product warranty.

OPERATING YOUR WINE CELLAR

It is recommended you install the wine cellar in a place where the ambient temperature is between 19ºC-24ºC (66ºF-75ºF), and humidity is under 60%. If the ambient temperature is above or below recommended temperatures, the performance of the unit may be affected. For example, placing your unit in extreme cold or hot conditions may cause interior temperatures to fluctuate.

Recommended temperature settings

Wine conservation: 12°C-14ºC (53°F-57ºF)
Rose and sparkling wines: 5°C-8ºC (41°F-46ºF)
Dry/white wines: 9°C-12ºC (48°F-53ºF)
Red wines: 14°C-18ºC (59°F-65ºF)
*Temperature ºC may varies between ≤ ± 2 ºC

AWC-30

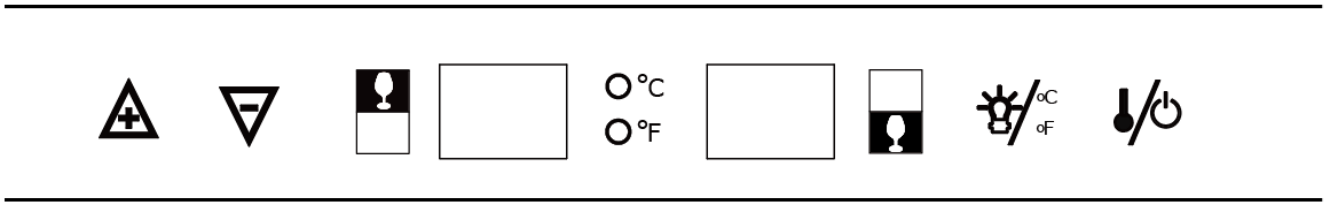

Temperature setting range： Upper zone：5-13℃(40-55℉) Lower zone：13-18℃(55-65℉)

	Press this button to turn on the unit, Press and hold on for 3S to turn off the unit. When unit is power on. Press this button to switch between two zones.Press once, the LED display on the right will display the preset temperature of the lower zone; Press it again to switch to the display on the left to show the preset temperature of the upper zone. The diplay will back to the actual temperature of inside if no operation in 5S.
	Press to increase the temperature. The display will back to actual temperature of inside if no operation in 5S.
	Press to decrease the temperature. The display will back to actual temperature of inside if no operation in 5S.

	Light ON/OFF & Switches between Celsius and Fahrenheit temperatures. Press it once to turn on the light; Press this button again to turn off the light. To switch to Celsius or Fahrenheit temperatures by pressing and holding on for 3S.

AWC-1950



Temperature setting range： Upper zone：5-13℃(40-55℉) Lower zone：13-18℃(55-65℉)

	Press for 3 seconds to turn on /off the appliance
	Adjusts the temperature in 1 degree increments
	Adjusts the temperature in 1 degree decrements
	Press to begin adjusting the temperature for upper or lower zone
	Toggles the temperature display between Celsius and Fahrenheit
	Turns the interior light on or off

Storage

Many bottles may differ in size and dimensions. As such the actual number of bottles you may be able to store may vary. You can place 70-75 standard bottles in this wine cellar.

Cleaning your wine cellar

Turn off the power, unplug the appliance, and remove all items including shelves. Wash the inside

surfaces with a warm water and baking soda solution. The solution should be about 2 tablespoons of baking soda to 1 cup of water.

Wash the shelves with a mild detergent solution. Wring excess water out of the sponge or cloth when cleaning area of the controls, or any electrical parts.

Wash the outside cabinet with warm water and mild liquid detergent. Rinse well and wipe dry with a clean soft cloth. Do not use steel wool or steel brush on the stainless steel. These will contaminate the stainless steel with steel particles and rusting may occur.

Shelves

To remove the shelves from the track, pull each shelf out to the shelf post,as shown in figure A. Lift it up again, then slowly pull the shelf out, as shown in figure B.

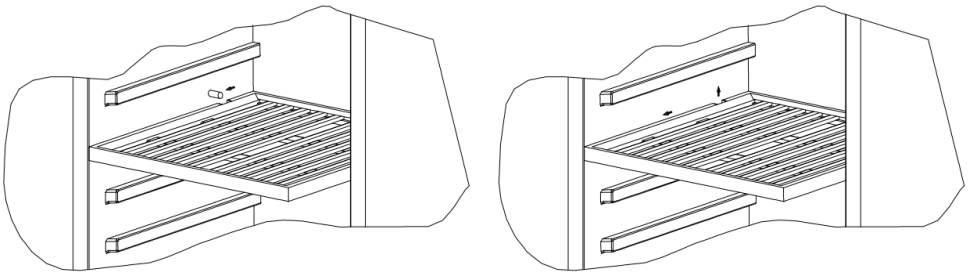

Figure A

Figure B

Shelves

This wine cellar is equipped with a sliding rail assembly and you can move the wooden shelves out and in smoothly.

The slide-out shelves allow bottles of wine to be viewed and removed more easily. Any of the shelves can be removed to store larger bottles.

To prevent damaging the door gasket, make sure to have the door all the way opened when pulling shelves out of the rail compartment. For easy access to the bottles, you may need to pull the shelves approximately 1/2 out of the rail compartment.

To Remove a Sliding Shelf

1. Remove all bottles from the shelf.
2. Pull the shelf out as far as it will go.
3. Adjust the lever on each side of the shelf, as shown below (UP on the left, DOWN on the right) and at the same time, pull the shelf out completely.

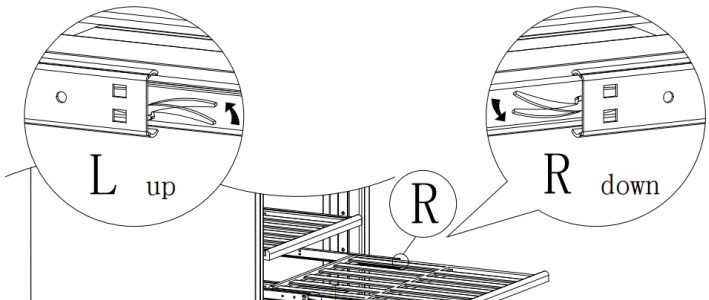

Power failure

Most power failures are corrected within a few hours and should not affect the temperature of your appliance if you minimize the number of times the door is opened. If the power is going to be off for a longer period of time, you need to take the proper steps to protect your contents.

Moving your wine cellar

- Remove all items (bottles)
- Tape down securely all loose items (shelves) inside your appliance.
- Turn the adjustable leg up to the base to avoid damage.
- Tape the door shut.
- Be sure the appliance stays secure in the upright position during transportation. If you absolutely need to transport the cellar horizontally, transport the cellar on its back (door on top). Also protect outside of appliance with a blanket, or similar item.

Energy saving tips

The wine cellar should be located in the coolest area of the room, away from heat producing appliances, and out of the direct sunlight.

TROUBLESHOOTING GUIDE

You can solve many common wine cellar problems easily, saving you the cost of a possible service call. Try the suggestions below to see if you can solve the problem before calling the servicer.

PROBLEM	POSSIBLE CAUSE	SOLUTION
cellar does not operate.	Not plugged in. The appliance is turned off. The circuit breaker tripped or a blown fuse.	Plug the unit. Press  to turn on the unit. Check the breaker and/or fuses.
cellar is not cold enough.	External environment may require a higher setting. The door is opened too often. The door is not closed completely. The door gasket does not seal properly.	Check the temperature control setting. Close the door properly. Check the door gasket.
The compressor turns on and off frequently.	The room temperature is hotter than normal. A large amount of contents has been added to the cellar. The door is opened too often. The door is not closed completely. The temperature control is not set correctly. The door gasket does not seal properly.	Close the door properly. Check the door gasket.
The fans turn on and off frequently.	In order to circulate the air and maintain the set temperature inside the cabinet the fans must cycle on and off even when the compressor is off. The fans will cycle ON and OFF while the compressor is off approximately every 10 seconds, this is called “Semi-speed status”. This cycle is normal and meant both to circulate the air as well as ensure the continued operational status of the fans. If the fan stops completely and does not complete this cycle the fan is non-operational.	
The light does not work.	Not plugged in. The circuit breaker tripped or a blown fuse. The light button is “OFF”.	Plug the unit. Check the breaker and/or fuses.

Vibrations.	The cellar is not leveled The bottles are vibrating. There is an object under the cellar.	Check to assure that the cellar is level. Make sure the bottles don't touch each others. Remove the object.
The cellar seems to make too much noise.	The cellar is not level.	Level the cellar The rattling noise may come from the flow of the refrigerant, which is normal. As each cycle ends, you may hear gurgling sounds caused by the flow of refrigerant in your cellar. Contraction and expansion of the inside walls may cause popping and crackling noises.
The door will not close properly.	The cellar is not level. The door was reversed and not properly installed. The gasket is dirty. The shelves are out of position.	Level the cellar. Close the door properly. Clean the door gasket. Place the shelves properly.
Error Code: E1-E2-E3	A sensor has failed.	Contact us for a service call.